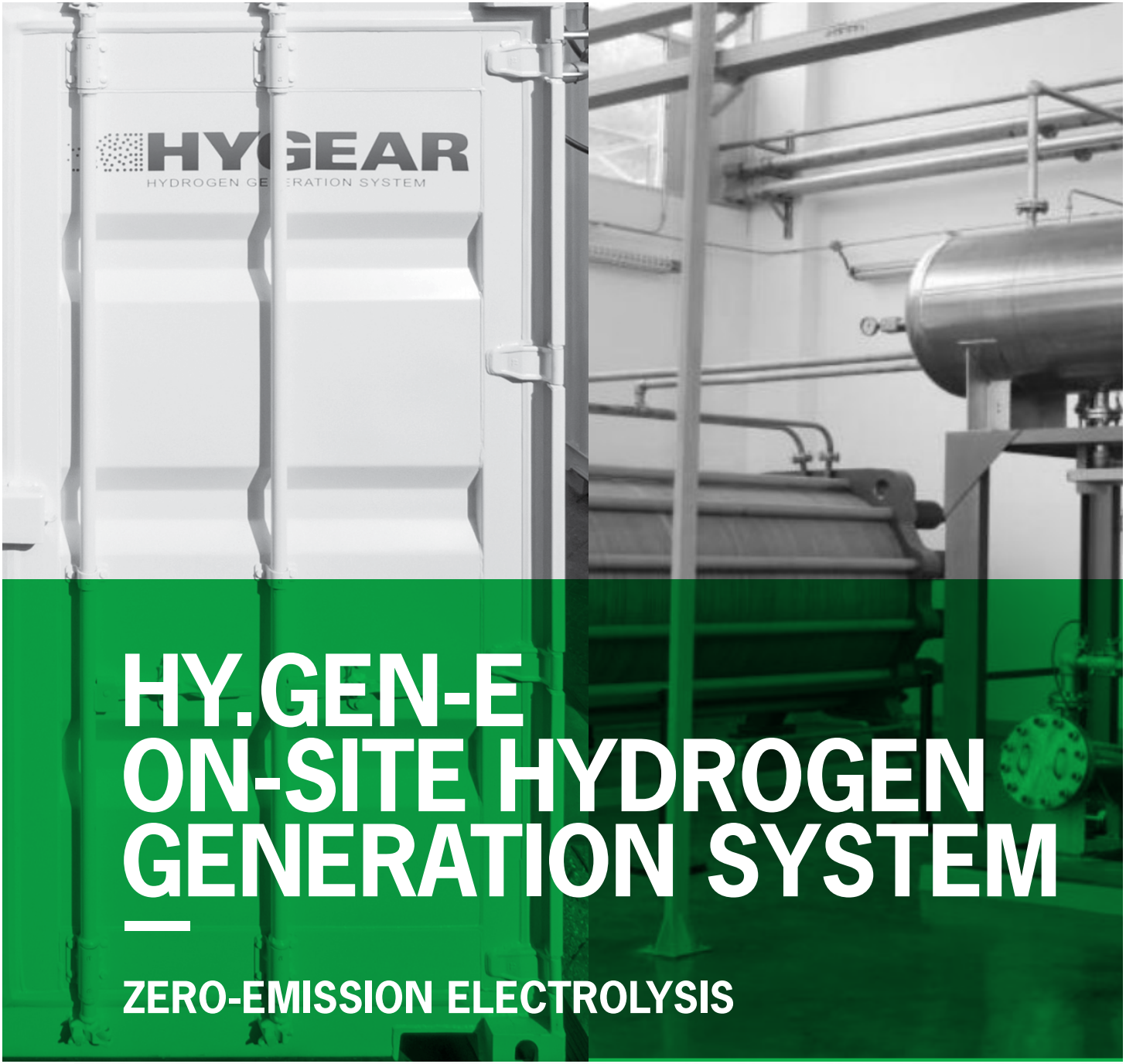

HY.GEN-E ON-SITE HYDROGEN GENERATION SYSTEM

ZERO-EMISSION ELECTROLYSIS

HYGEAR

ZERO EMISSION HYDROGEN SUPPLY

HyGear offers hydrogen supply ranging from 10 Nm^3/h up to 1000 Nm^3/h. We apply both technologies of steam methane reforming and electrolysis. Our steam methane reformers offer the most energy efficient and cost-effective supply of hydrogen. Our electrolysers offer zero emission hydrogen supply and are especially suited for applications where electricity is affordable or zero emission is mandatory or desired.

The Hy.GEN-e systems produce hydrogen through alkaline electrolysis technology. This is the most widely applied and proven technology available today and therefore offers a safer and more reliable alternative to conventional hydrogen supply by trailers.

Our product portfolio consists of four standardised models and can be placed in parallel to tailor the total supply to the customer's needs. Systems are containerised to minimise floor space, which is important in some applications like hydrogen filling stations.

Applications

- Flat glass industry
- Metal industry
- Food industry
- Semiconductor industry
- Electronics industry
- Chemical industry
- Hydrogen filling stations

KEY BENEFITS

- Zero local emissions
- Optimised efficiency by innovative gas treatment
- 100% reliability through backup supply
- Flexible contracting
- Autonomous and safe operation
- Compact and modular system
- Independent from third party supply
- Co-supply of hydrogen and oxygen possible

TECHNOLOGY

Pre-treated water is fed into the lye tank which the lye is prepared and sent to the electrolyser. In the electrolyser, water is split into hydrogen and oxygen gas using electric power. Hydrogen gas is evolved at the cathode side of a cell and exits through perforations at the cathode side separator plate towards the hydrogen manifold channels. From there, it flows out from the centre of the stack. The reaction involved at the cathode: $2H_2O + 2\,e^- \rightarrow H_2 + 2OH^-$.

At the same time, oxygen gas is evolved at the anode side of the cells and flow out from the middle plates of cells. The reaction involved at the anode: $2OH^- \rightarrow H_2O + \frac{1}{2}\,O_2 + 2\,e^-$.

Hydrogen and oxygen gas then enters the hydrogen separator and oxygen separator respectively, where the lye is separated from the gases and recycled back into the electrolyser via the lye pump. The hydrogen gas is then fed to the Temperature Swing Adsorption unit for further purification while oxygen is vented out as a by-product or can be upgraded and used when required.

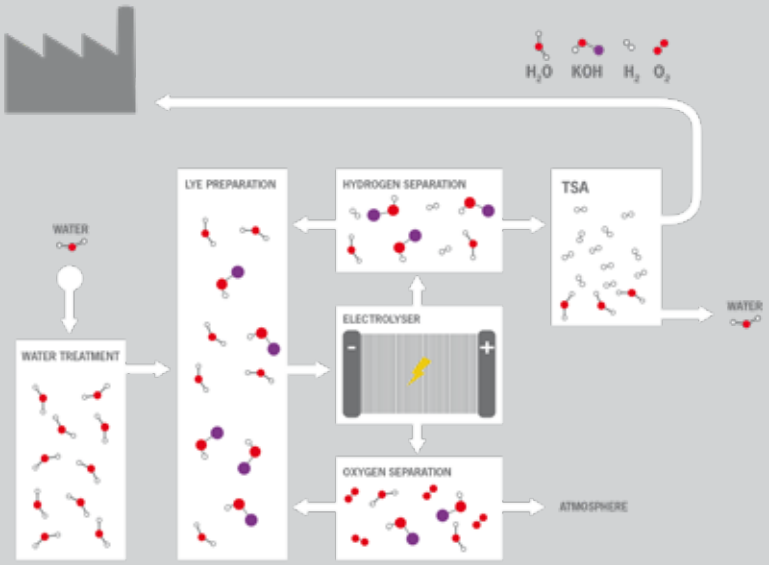

Modular electrolyser

The electrolyser uses bipolar pressurisation technology with a specially designed material to prevent leakage during operation. This ensures a long life time, high system efficiency and limited maintenance costs.

A special activation process is conducted at the cathode in the electrolyser to ensure high efficiency of water electrolysis with relatively low power consumption.

Effective TSA technology

The system uses Temperature Swing Adsorption (TSA) technology with the ability to operate under the pressure of 15 bar(g) without the use of any compressor. This is more energy and cost-efficient when compared to traditional gas separation systems.

The TSA consists of three hydrogen adsorbers that enables a continuous removal of moisture from the recirculated hydrogen.

WHAT'S INSIDE

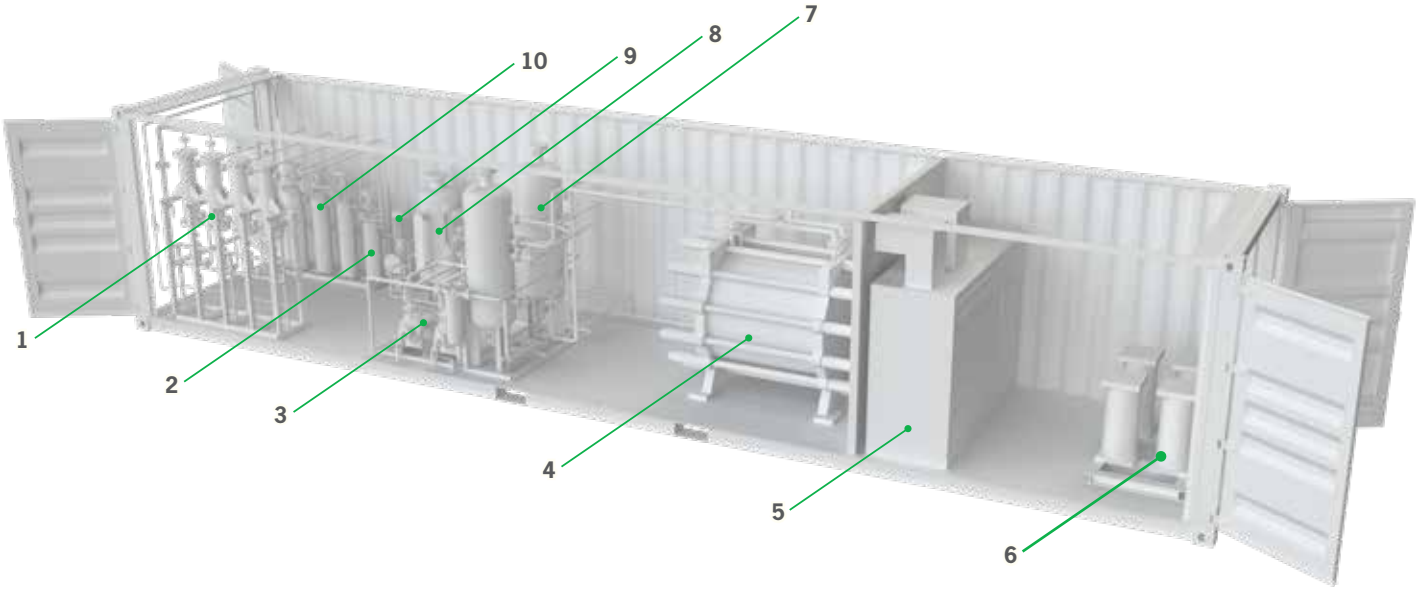

1. Hydrogen cooler
2. Hydrogen purifier
3. Lye solution circulation pump
4. Electrolyser stack
5. Control cabinet
6. Transformer
7. Gas-lye treater
8. Demineralised water tank
9. Demineralised water pump
10. TSA vessels

SPECIFICATIONS

MODEL	Hy.GEN-E 10	Hy.GEN-E 50	Hy.GEN-E 100	Hy.GEN-E 150
OUTPUT				
Nominal hydrogen flow	Max. 10 Nm^3/h	Max. 50 Nm^3/h	Max. 100 Nm^3/h	Max. 150 Nm^3/h
Hydrogen purity range	99.9% - 99.999 %	99.9% - 99.999 %	99.9% - 99.999 %	99.9% - 99.999 %
Pressure range	3 - 32 bar(g)	3 - 20 bar(g)	3 - 20 bar(g)	3 - 20 bar(g)
TYPICAL CONSUMPTION DATA				
Electricity	80 kVA	350 kVA	700 kVA	1000 kVA
Water	20 L/h	60 L/h	120 L/h	180 L/h
Compressed air	6 Nm^3/h	6 Nm^3/h	8 Nm^3/h	10 Nm^3/h
Cooling water	12 Nm^3/h	20 Nm^3/h	30 Nm^3/h	40 Nm^3/h
DIMENSIONS				
Size	40 ft	40 ft	40 ft	Skid-mounted
OPERATING CONDITIONS				
Start up time (warm)	45 min	35 min	30 min	30 min
Start up time (cold)	90 min	70 min	60 min	60 min
Modulation (H_2 product flow)	20 - 100 %	50 - 100 %	50 - 100 %	50 - 100 %
Ambient temperature range	5 - 50 °C	5 - 50 °C	5 - 50 °C	5 - 50 °C

All data and values are indicative and based on nominal and non-frost conditions.

Normal condition (Nm^3) is defined at a temperature of 0°C and pressure of 1.013 bar(a).

IF YOU REQUIRE OTHER SPECIFICATIONS, CONTACT US TO ASSIST YOU WITH THE MOST OPTIMAL SOLUTION.

FIND US

USA
T +31 88 9494 304
E USA@hygear.com

Europe
T +31 88 9494 300
E info@hygear.com

Asia
T +65 6909 3064
E Asia@hygear.com

HyGear Asia Pte. Ltd.
133 Cecil Street
#09-01B Keck Seng Tower
Singapore 069535

HEAD OFFICE

NETHERLANDS

FIND US
Westervoortsedijk 73
6827 AV Arnhem

SEND US
P.O. Box 5280
6802 EG Arnhem

CONTACT US
T +31 88 9494 300
E info@hygear.com
W www.hygear.com

SALES
T +31 88 9494 308
E sales@hygear.com

www.hygear.com

HYGEAR